Weebles®

PLAYSKOOL®

PLAYGROUND INSTRUCTIONS

9 mos. & up

Adult Assembly Required. Phillips screwdriver required for assembly.

CAUTION: This product contains small parts which are necessary for assembly. Prior to and during assembly of this product, keep small parts out of children's reach. Small parts pose a choke hazard to children under 3 years.

Thank you for purchasing this toy. If you have any questions or comments about this product, please call Playskool toll free at 1-800-PLAYSKL (1-800-752-9755).

Includes: Base, roof, 2 arches, slide, swing, 3 screws, and 2 Weebles figures.

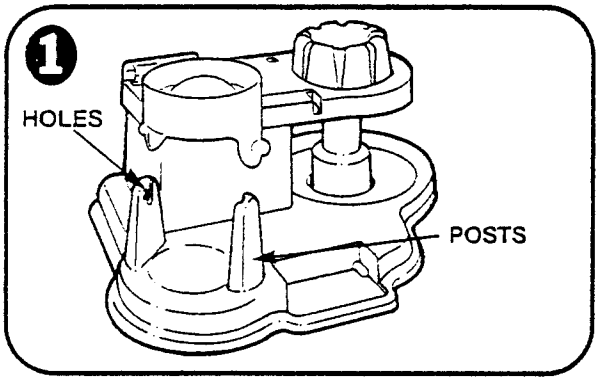

Holding swing upside down, insert posts on swing into holes in swing supports.

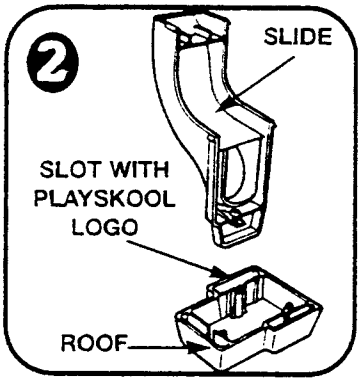

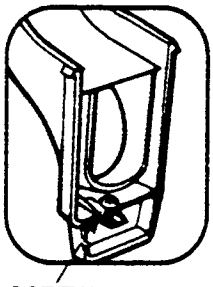

Turn roof upside down. Insert end of slide into **slot with Playskool® logo on it.** Insert screw into hole and tighten with a Phillips screwdriver.

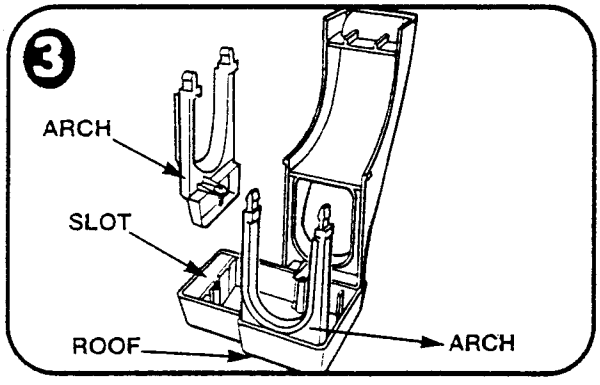

Insert either arch into one of the remaining slots, insert screw into hole and tighten with a Phillips screwdriver. Repeat with remaining arch.

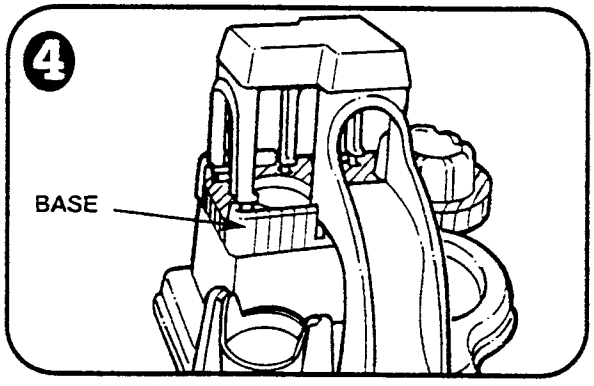

Turn entire assembly right side up, and snap tabs into holes in base.

Product and colors may vary.

©1996 Hasbro, Inc., Pawtucket, RI 02862 USA. All Rights Reserved.
®denotes Reg. U.S. Pat. & TM Office.
U.S. Patent Pending.

ASSEMBLED IN MEXICO FROM U.S. COMPONENT PARTS. WEEBLES FIGURES MADE IN CHINA.

P/N 46529400 5245