SMALL SOLDIERS™

⚠ WARNING:

CHOKING HAZARD-Toy contains a small ball.
Not for children under 3 years.

Ages: 4 & Up

10358

GLOBOTECH TOY FACTORY™

Thank you for choosing this creative toy that lets you recreate all kinds of awesome Small Soldiers battles!

For maximum enjoyment of this product, be sure to follow all instructions carefully. If you have any questions, comments, or need additional information concerning this product or its parts, please call our Hasbro Consumer Affairs hotline at 1-800-327-8264, Monday through Friday during business hours (eastern time).

Includes: mold machine, 4 character molds, 2 mold brackets, tank (with removable cutter), catapult, boulder, playmat and 2 containers of compound [Net Weight: 1.2 oz. per container (35 grams); Total Net Weight 2.4 oz. (70 grams)].

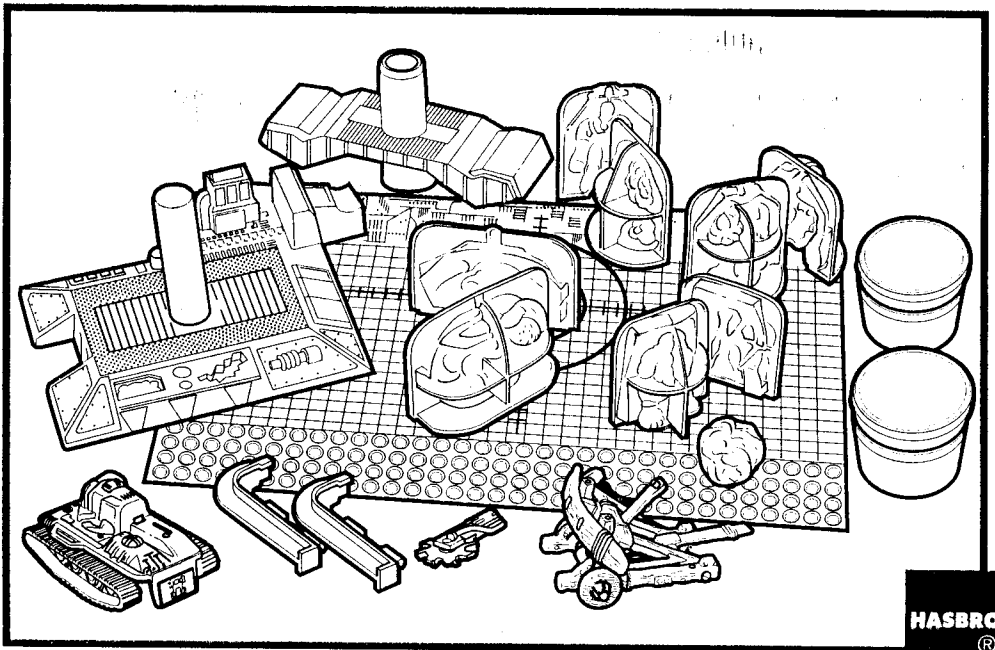

HASBRO®

MOLD A SMALL SOLDIERS CREATION!

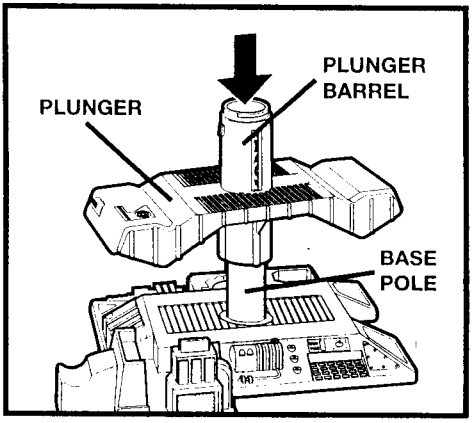

1. Slide plunger barrel onto base pole as shown.

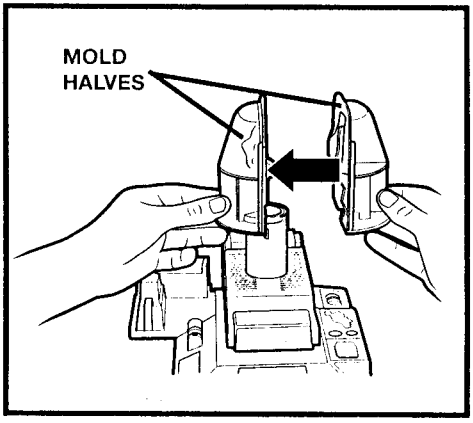

2. Choose mold halves of the Small Soldiers character you wish to mold. Fit mold halves onto plunger barrel lip as shown.

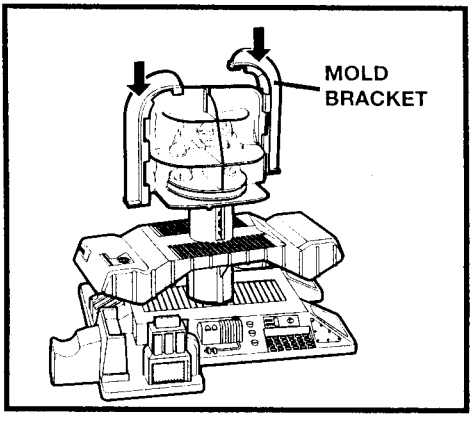

3. Secure mold halves by sliding mold brackets onto molds as shown.

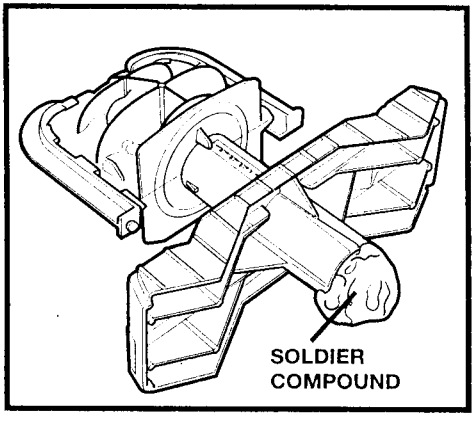

4. Remove plunger/mold from base pole. Press Soldier Compound into bottom of plunger barrel until compound fills barrel and appears at bottom of mold.

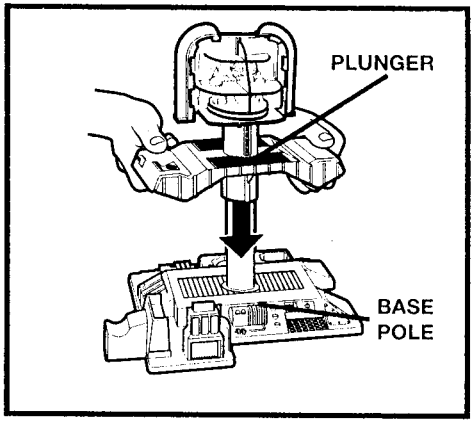

5. Place bottom of plunger over the base pole and press plunger down with both hands to fill the mold with compound.

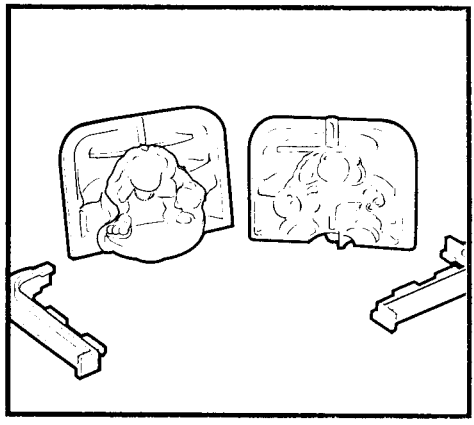

6. Remove mold brackets from mold. Remove mold halves from plunger barrel. Twist plunger to free molded compound and remove compound from plunger. Remove excess compound from molded figure to complete your Small Soldiers creation!

LET THE BATTLES BEGIN!

The GloboTech Toy Factory has everything you need to create all kinds of exciting battles between the Commando Elites™ and the Gorgonites™! The rest is up to your imagination!

- Use the playmat as your battlefield!

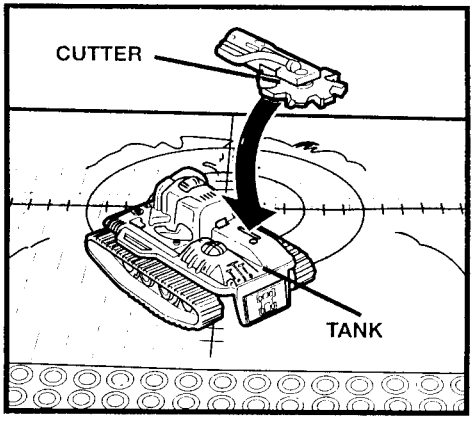

- Mash and crash with the Commando Elite™ tank! You can also remove the cutter and use the spinning blade to cut the Soldier Compound.

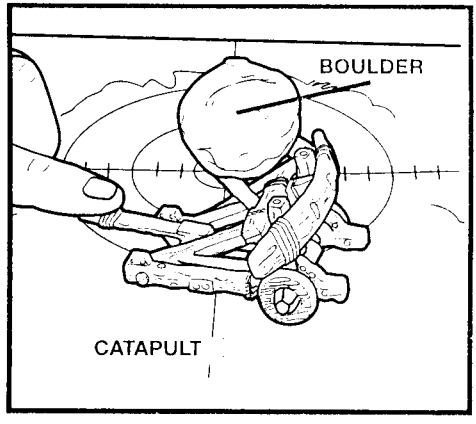

- Push down on one side of the Gorgonite™ catapult to send the boulder flying!

COMPOUND TIPS

IMPORTANT:

When compound is removed from the container, it will dry out and harden in less than an hour. Once hardened, the compound can no longer be molded. To keep compound fresh, always store it in the container with the cover on.

Compound may stick to or stain carpets/fabrics and varnished surfaces.

TO CLEAN FROM CARPETS/FABRICS:

Remove excess compound, allow to dry, and vacuum. If residue remains, clean with household carpet spot remover or commercial carpet cleaner. Machine washable items should be cleaned according to instructions on those items. Do not dry clean.

NONTOXIC CONFORMS TO ASTM D-4236
Hasbro is a trademark of Hasbro, Inc.
® and © 1998 Hasbro, Inc., Pawtucket, Rhode Island 02862 USA.
Small Soldiers™ and © 1998 Universal City Studios, Inc. DreamWorks and Amblin Entertainment.
MADE IN CHINA. 10358 P/N 47944201