Silly Soccer™

FOR 1 OR MORE PLAYERS

AGES 3 TO 6

Contents

• Electronic module • 5-piece frame with 2-piece platform and pedal • ramp • cloth net • goalie face and eyepiece • 2 legs, hands and sneakers • ball • label sheet

Assembling Your Game

Remove the game parts from their bags, and discard the bags. Carefully detach the cardboard platform from the parts sheet, and discard the waste.

The back of the box shows a photo of a Silly Soccer game. You may want to use it as a handy reference while you assemble your own game.

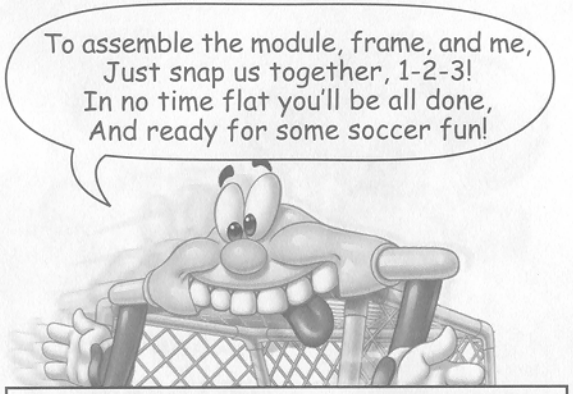

STEP 1. THE MODULE

Insert the batteries: Turn the module upside-down. Loosen the 2 screws on the battery box, and remove the door. Insert 4 "C" size batteries (we recommend alkaline), making sure to match the + and – symbols with the markings in the plastic. See Figure 1.

Set the volume: Set the Volume switch (see Figure 1) on HIGH or LOW. Replace the battery door and tighten the screws. Then turn the module rightside up.

Figure 1

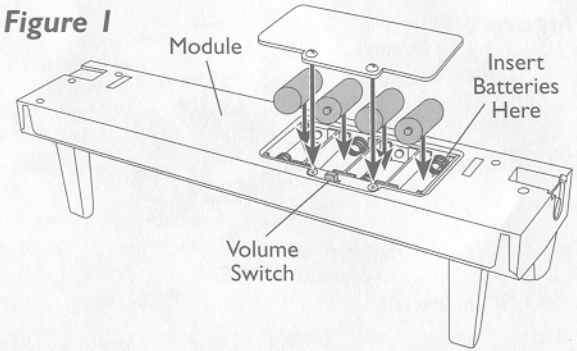

⚠ CAUTION: TO AVOID BATTERY LEAKAGE

1. Be sure to insert the batteries correctly and always follow the game and battery manufacturers' instructions.
2. Do not mix old and new batteries, or alkaline, standard (carbon-zinc) or rechargeable (nickel-cadmium) batteries.
3. Always remove weak or dead batteries from the product.

MOM: The Volume switch is inside the battery compartment so that *you,* not your child, can control how loud or soft the sound will be. (You're welcome!)

STEP 2. THE FRAME

The side frames: Slide and snap the side frames down onto the side of the module. The letters are printed inside the frames. See Figure 2.

Figure 2

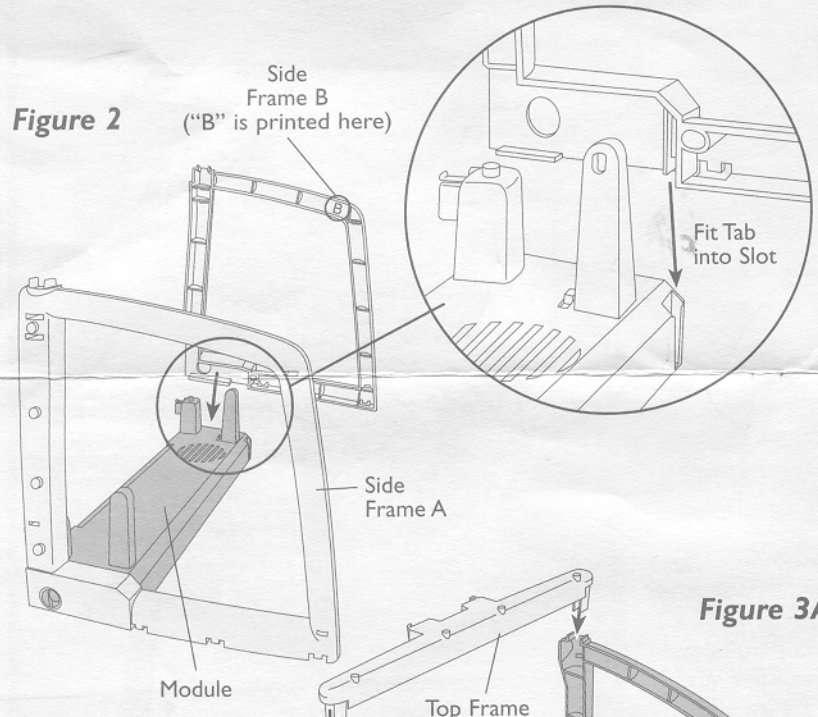

Figure 3A

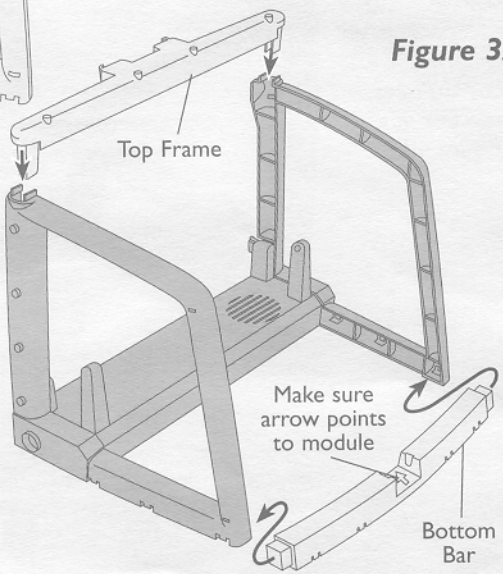

The top frame and bottom bar: Snap the top frame and bottom bar onto the side frames. See Figure 3A.

The pedal: Apply the label, then snap the pedal onto the bottom bar. See Figure 3B.

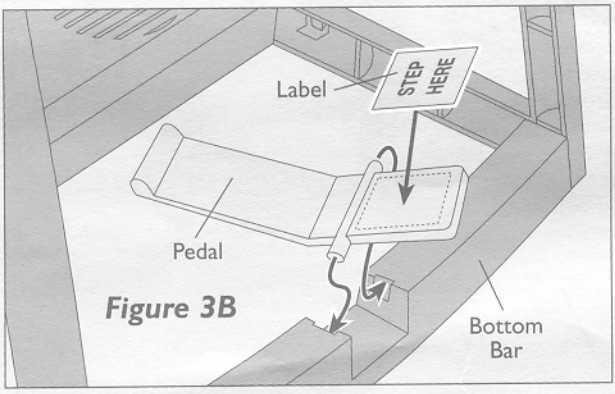

Figure 3B

The platform: Slide the platform under the center frame tabs, then snap under the end tabs. See Figure 4A.

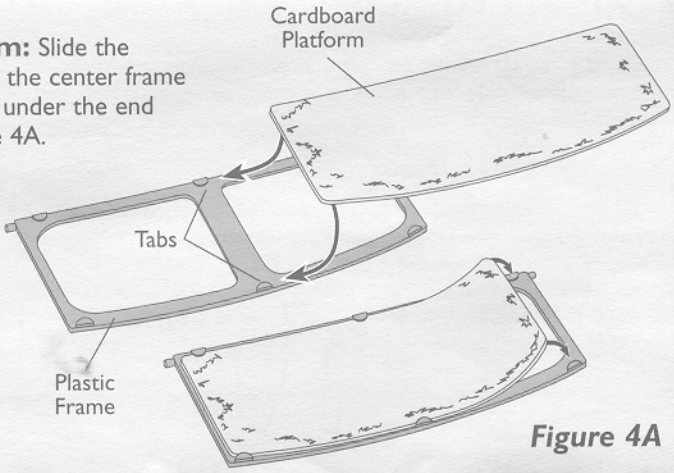

Figure 4A

Fit the platform pegs into the holes in the side frames, one side at a time. See Figure 4B.

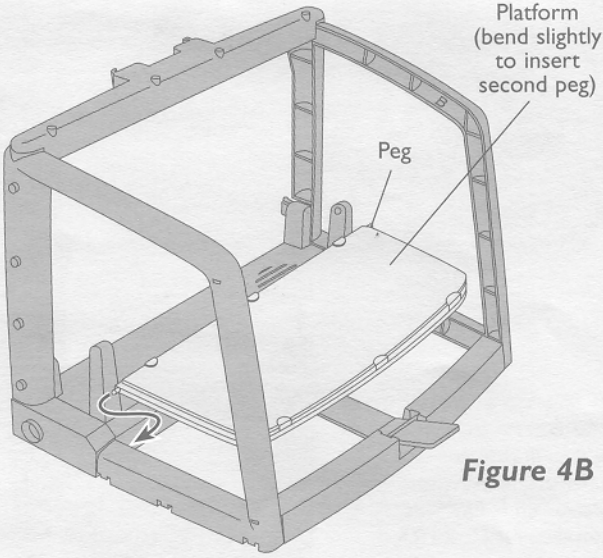

Figure 4B

The back bar: Snap the back bar into the frame, matching sides A and B. See Figure 5. The letters are printed on the parts.

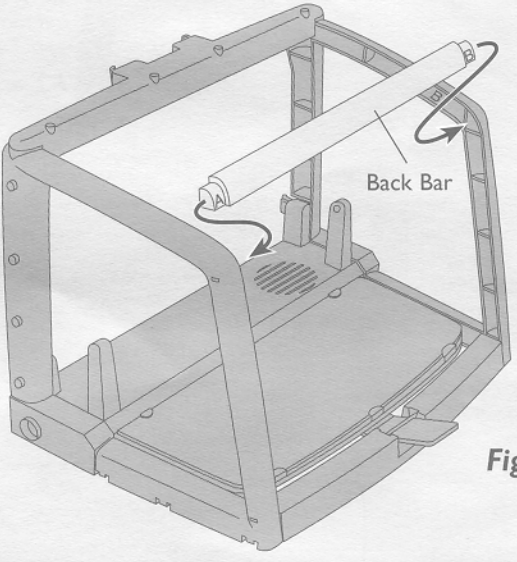

Figure 5

STEP 3. THE GOALIE

The legs: Press the legs onto the frame. See Figure 6. *Note:* The leg tops will be loose.

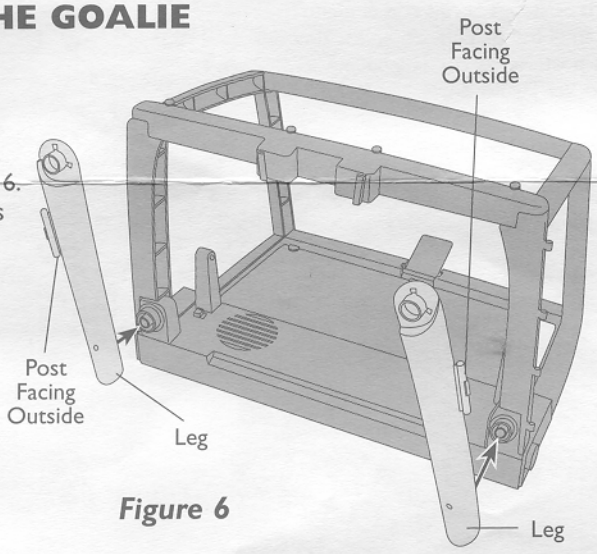

Figure 6

The face and eyepiece: Apply the mouth and eye labels, then slide the eyepiece into the face slot. See Figure 7A.

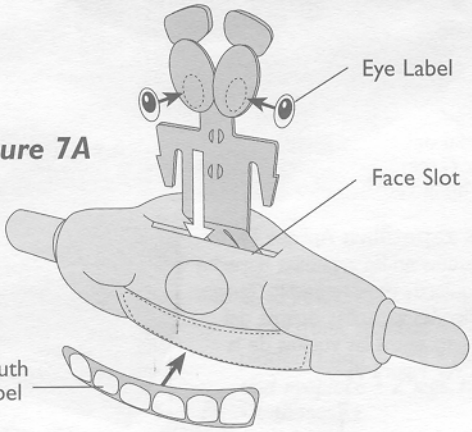

Figure 7A

Slide the sides of the eyepiece down into the notches of the top frame, until it snaps into place. See Figure 7B.

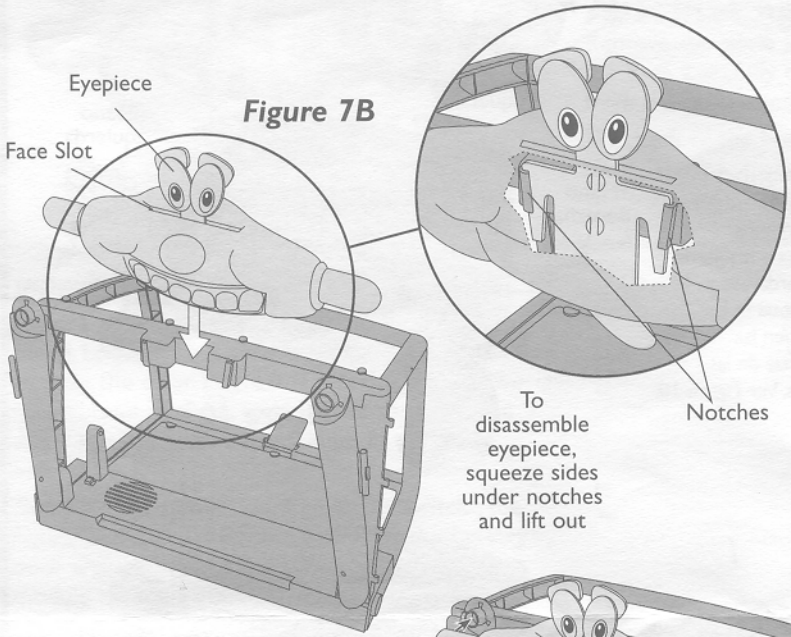

Figure 7B

Snap the assembled face and eyepiece onto the leg tops. See Figure 7C.

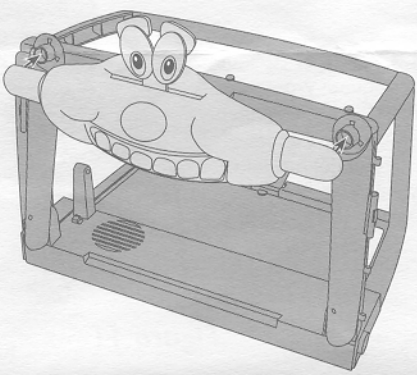

Figure 7C

The net: Hold the net with the tag in front. Loop it into the 2 front hooks with the tag in the middle. See Figure 8A.

Then loop the net around the rest of the frame as shown in Figure 8B. *Note:* The net will fit loosely in the corners.

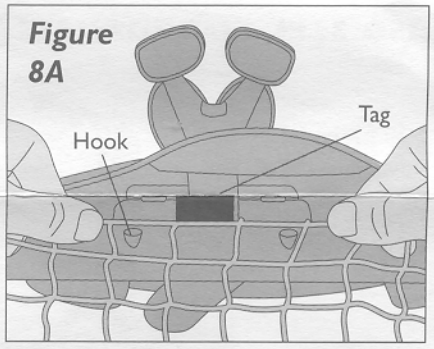

Figure 8A

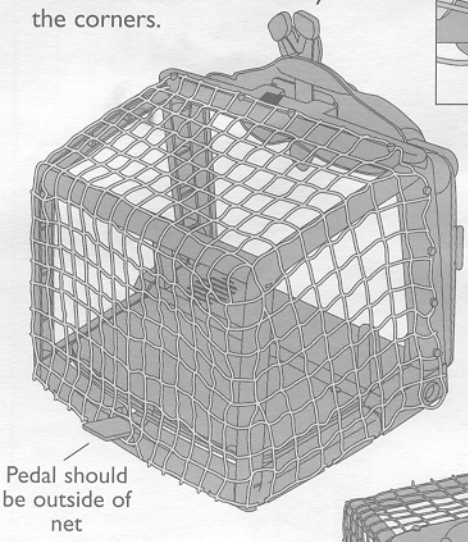

Figure 8B

The sneakers: Apply the labels to the goalie's left and right sneakers. Then slide the sneakers into the module, between the net loops. See Figure 9.

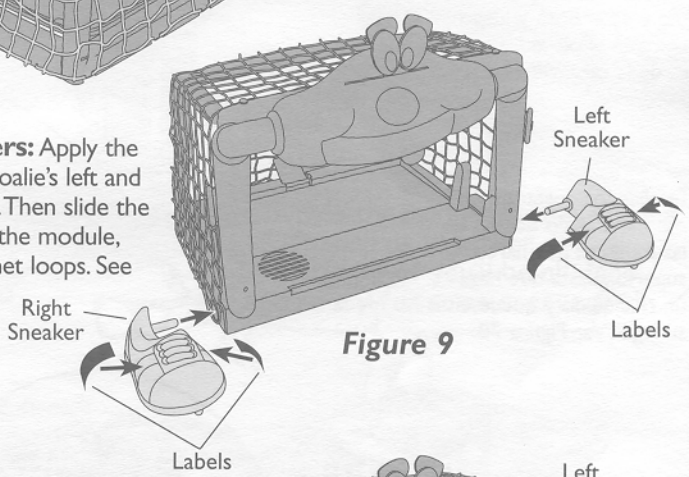

Figure 9

The hands: Apply the labels to the goalie's left and right hands, then snap the hands into the leg posts. See Figure 10.

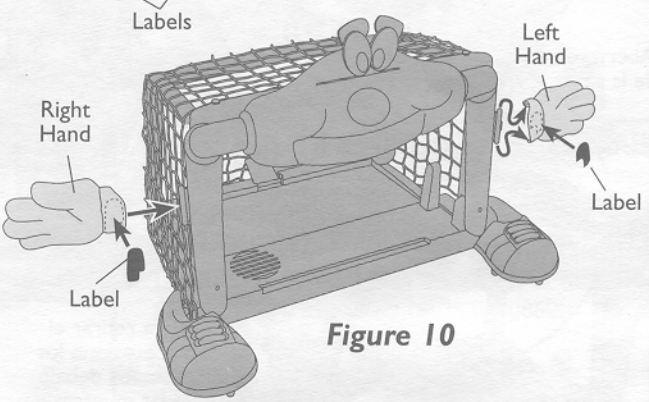

Figure 10

The ramp: Apply the label, then fit the ramp tabs into the module slots. See Figure 11.

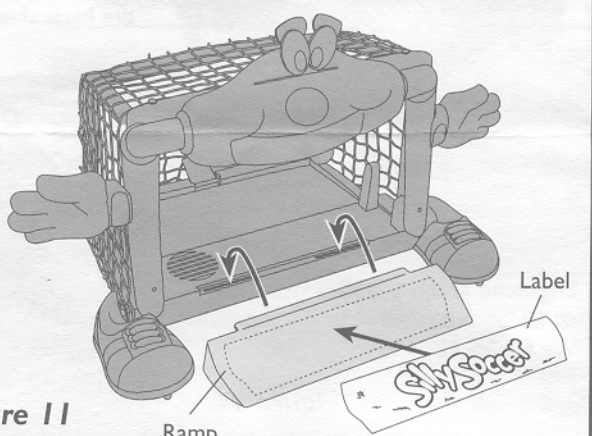

Figure 11

HOW TO PLAY

Place the game on the floor. Slide the ON/OFF switch ON. The Goalie will begin moving and chattering as he waits for the game to begin!

GROUP GAME

This is a good game for 3 or more players. It's all-action as each player tries to kick the ball in for a goal.

Object: Score 1 point each time you kick the ball into the goal. The first player to score 5 points wins!

To Play: Players stand a few feet in front of the goal with the ball in front of them.

> **MOM:** Players should stand far enough from the goal to be challenged, but close enough to have a fair chance of scoring. Consider their age and ability when deciding what that distance should be.

When the whistle blows, the game begins! Players kick the ball toward the goal, as in a real soccer game.

Scoring a Goal: When the ball goes into the goal, you'll hear a buzzer. That's a goal!

The player who scored the goal earns 1 point. That player steps on the pedal in back of the goal, to flip the ball out. Players then wait for the whistle to blow, then continue the game as they try to score goals.

As the game goes on, players keep track of the points they've scored; or they can assign a scorekeeper to keep track of everyone's points. (Gee, Mom, would that be you?)

To Win: The first player to score 5 points wins!

TEAM PLAY

Try this fun variation of the Group Game, if the players can be split up evenly into teams.

To play: The rules are the same as for the Group Game. Whenever a player scores a goal, his or her team gets 1 point. The first team to score 5 points wins!

HEAD-TO-HEAD GAME

To Play: In this 2-player game, the younger player takes the first turn.

On your turn, stand any distance away from the goal, and kick the ball. Just kick the ball, or try a special kick!

- If the ball does not go into the goal, sorry! Your turn is over.
- If the ball goes into the goal, you score a point. Now the other player has to try the same kick, from the same distance. If this player gets a goal, he or she also scores a point. This ends your turn.

To Win: The first player to score 5 points wins! In case of a tie, just play again!

PLAYING JUST FOR KICKS

No competition around? Practice your special moves and trick kicks from different angles and distances. Then when game time rolls around, you'll impress your opponents with your awesome skills!

DONE PLAYING FOR NOW?

To turn the game off, slide the ON/OFF switch OFF.

Storing Your Game: Yes, your game can be disassembled for storage. Just unhook the net, then separate the goalie and frame pieces. (To disassemble the eyepiece, see Figure 7B, above.) Then place the parts back in the box. Don't forget these instructions!

We will be happy to hear your questions or comments about this game. Write to: Hasbro Games, Consumer Affairs Dept., P.O. Box 200, Pawtucket, RI 02862. Tel: 888-836-7025 (toll-free). Canadian consumers please write to: Hasbro Canada Corporation, 2350 de la Province, Longueuil, QC Canada, J4G 1G2

FCC STATEMENT

This equipment has been tested and found to comply with the limits for a Class B digital device, pursuant to part 15 of the FCC Rules. These limits are designed to provide reasonable protection against harmful interference in a residential installation. This equipment generates, uses, and can radiate radio frequency energy, and, if not installed and used in accordance with the instructions, may cause harmful interference to radio communications. However, there is no guarantee that interference will not occur in a particular installation. If this equipment does cause harmful interference to radio or television reception, which can be determined by turning the equipment off and on, the user is encouraged to try to correct the interference by one or more of the following measures:

- Reorient or relocate the receiving antenna.
- Increase the separation between the equipment and the receiver.
- Consult the dealer or an experienced radio/TV technician for help.

©2003 Hasbro, Pawtucket, RI 02862. All Rights Reserved. ® denotes Reg. US Pat. & TM Office. 40899

HASBRO.COM
FOR NEW PRODUCTS AND OFFERS

MB® MILTON BRADLEY

Hasbro®

PROOF OF PURCHASE

MB MILTON BRADLEY

40899 Silly Soccer™